ACCESSIBILITY PROFESSIONALS

Barrier Free Tile Over Shower Pan 60"x 30"
Model # APR3060CBF Left drain

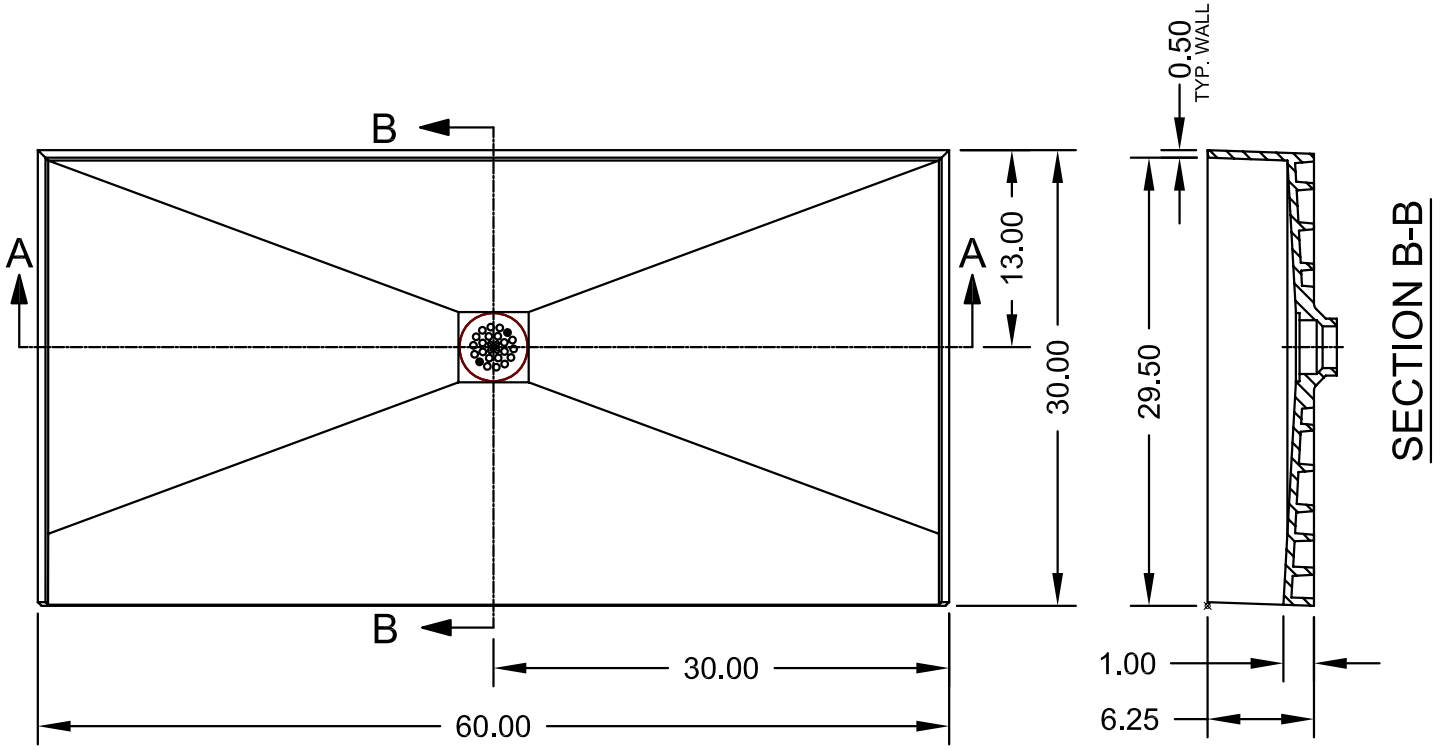

SCALE: 1/12

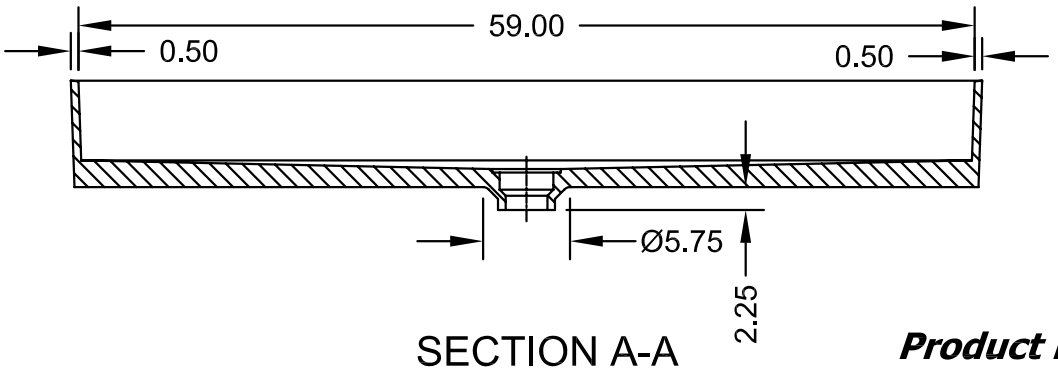

SECTION A-A

ANSI Z124.1-95 ASTM F462-79
ANSI Z124.2-95 B45.0-02
ICC/ANSI A117.1.98 B45.5-02

Made in America

Product Features:

.Intergrated 2" PVC drain (adaptable to cast iron and ABS)
.Intergrated curb with structural ribbing
.6" Splash Walls
.Floor pre-pitched ¼" per foot to drain
.Tile set directly on pan surface
.No mud setting or hot mopping required
.Round polished adjustable drain plate (square plates available)